NORDIC VALVES

FM APPROVED

Resilient Seated NRS Type – Flanged Ends

Fig. NSG-NRS-FF

Valve Standard
Conforms to AWWA C515/BS5163
Fusion bonded coating comply with AWWA C550

Working pressure
365 PSI

Connection Ends
AWWA C 606
VDS2100/AS2638.2

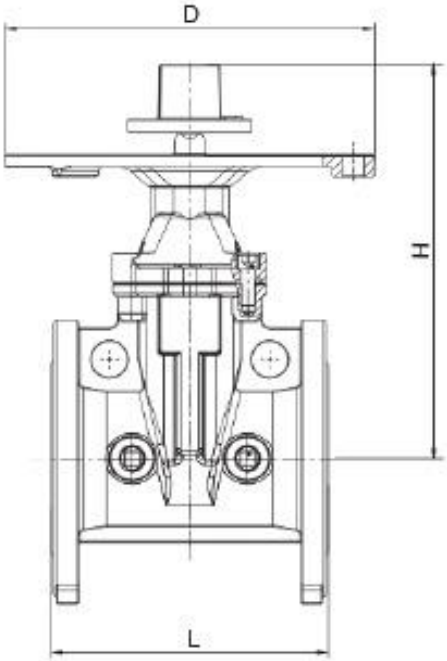

Part Name	Material	Specification
Body	Ductile Iron	A536 65-45-12
Wedge Disc	Ductile Iron	EPDM Coated
Disc Nut	Bronze	ASTM B62
Stem	Stainless Steel	AISI 304
Bonnet	Ductile Iron	A536 65-45-12
Gasket	EPDM	Commercial
Thrust Collar	Bronze	ASTM C51100
Gland	Ductile Iron	A536 65-45-12
Wrench Nut	Ductile Iron	A536 65-45-12
Post Plate	Ductile Iron	A536 65-45-12

SIZE	mm inch	50 2	65 2½	80 3	100 4	125 5	150 6	200 8	250 10	300 12
L	mm inch	178	191	203	229	254	267	292	330	356
H	mm inch	263	263	293	326	420	420	506	610	711
D	mm inch	305	305	305	305	305	305	305	305	305

NORDIC VALVES

FM APPROVED

Resilient Seated NRS Type – Flanged x Grooved

Fig. NSG-NRS-FG

Valve Standard
Conforms to AWWA C515/BS5163
Fusion bonded coating comply with AWWA C550

Working pressure
365 PSI

Connection Ends
AWWA C 606
VDS2100/AS2638.2

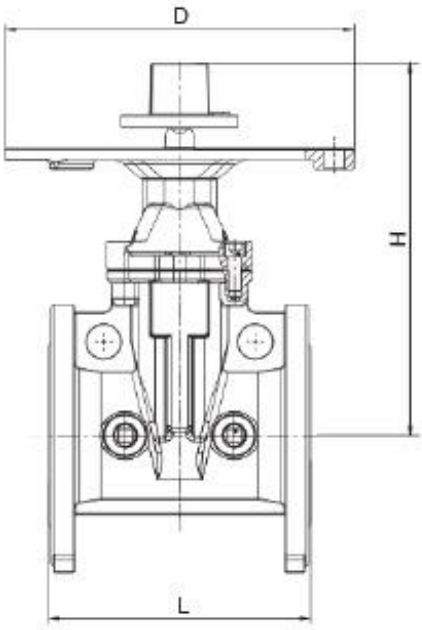

Part Name	Material	Specification
Body	Ductile Iron	A536 65-45-12
Wedge Disc	Ductile Iron	EPDM Coated
Disc Nut	Bronze	ASTM B62
Stem	Stainless Steel	AISI 304
Bonnet	Ductile Iron	A536 65-45-12
Gasket	EPDM	Commercial
Thrust Collar	Bronze	ASTM C51100
Gland	Ductile Iron	A536 65-45-12
Wrench Nut	Ductile Iron	A536 65-45-12
Post Plate	Ductile Iron	A536 65-45-12

SIZE	mm inch	50 2	65 2½	80 3	100 4	125 5	150 6	200 8	250 10	300 12
L	mm inch	178	191	203	229	254	267	292	330	356
H	mm inch	263	263	293	326	420	420	506	610	711
D	mm inch	305	305	305	305	305	305	305	305	305

NORDIC VALVES

FM APPROVED

Resilient Seated NRS Type - Grooved

Fig. NSG-NRS-GG

Valve Standard
Conforms to AWWA C515/BS5163
Fusion bonded coating comply with AWWA C550

Working pressure
365 PSI

Connection Ends
AWWA C 606
VDS2100/AS2638.2

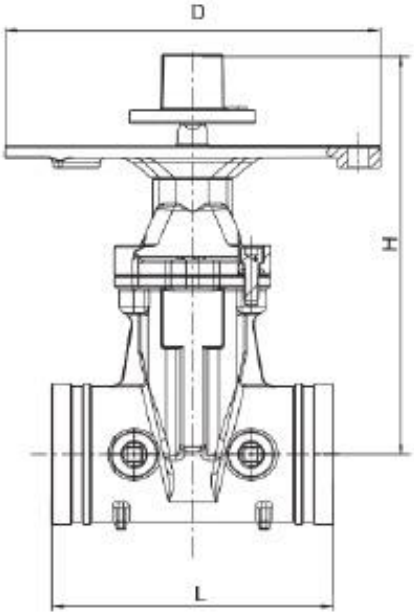

Part Name	Material	Specification
Body	Ductile Iron	A536 65-45-12
Wedge Disc	Ductile Iron	EPDM Coated
Disc Nut	Bronze	ASTM B62
Stem	Stainless Steel	AISI 304
Bonnet	Ductile Iron	A536 65-45-12
Gasket	EPDM	Commercial
Thrust Collar	Bronze	ASTM C51100
Gland	Ductile Iron	A536 65-45-12
Wrench Nut	Ductile Iron	A536 65-45-12
Post Plate	Ductile Iron	A536 65-45-12

SIZE	mm inch	50 2	65 2½	80 3	100 4	125 5	150 6	200 8	250 10	300 12
L	mm inch	178	191	203	229	254	267	292	330	356
H	mm inch	263	263	293	326	420	420	506	610	711
D	mm inch	305	305	305	305	305	305	305	305	305